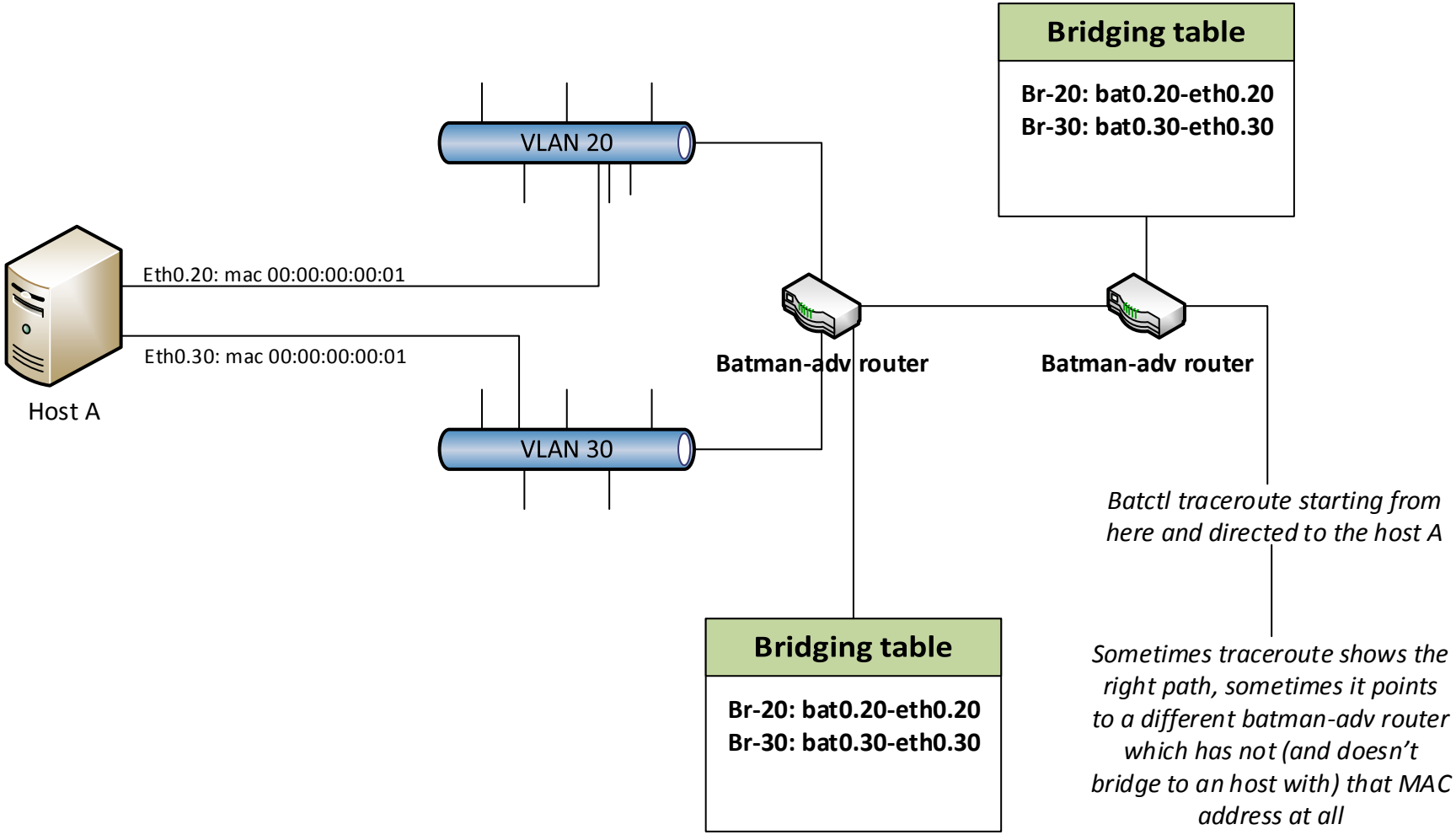
Bridging table
Br-20: bat0.20-eth0.20
Br-30: bat0.30-eth0.30
VLAN 20
Eth0.20: mac 00:00:00:00:01
Eth0.30: mac 00:00:00:00:01
Host A
VLAN 30
Batman-adv router
Batman-adv router
Batctl traceroute starting from here and directed to the host A
Bridging table
Br-20: bat0.20-eth0.20
Br-30: bat0.30-eth0.30
Sometimes traceroute shows the right path, sometimes it points to a different batman-adv router which has not (and doesn't bridge to an host with) that MAC address at all